avanat

DESIGNER SERIE

INSTALLATION INSTRUCTIONS

for square cassette blind and fabric

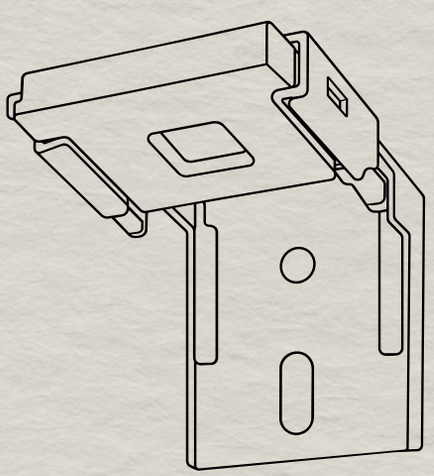

< 39 po	2X 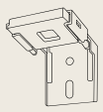	4X 	4X 	1X 
> 43 po	3X 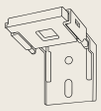	6X 	6X 	1X 

01. POSITION THE BLIND

Install the blind inside the window frame.

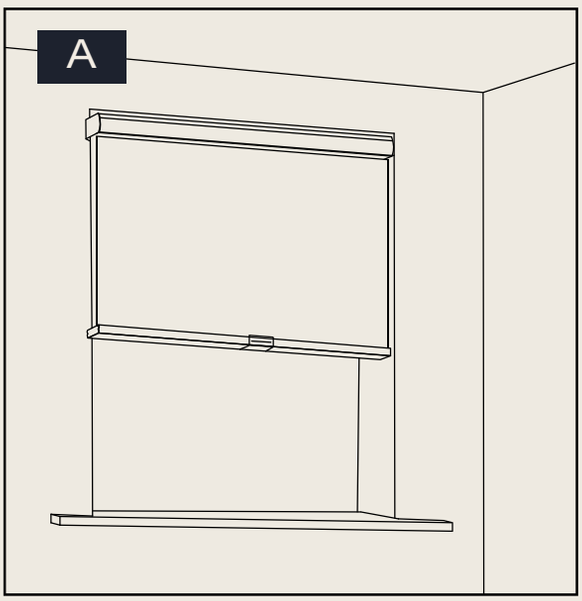

Install the blind outside the window frame.

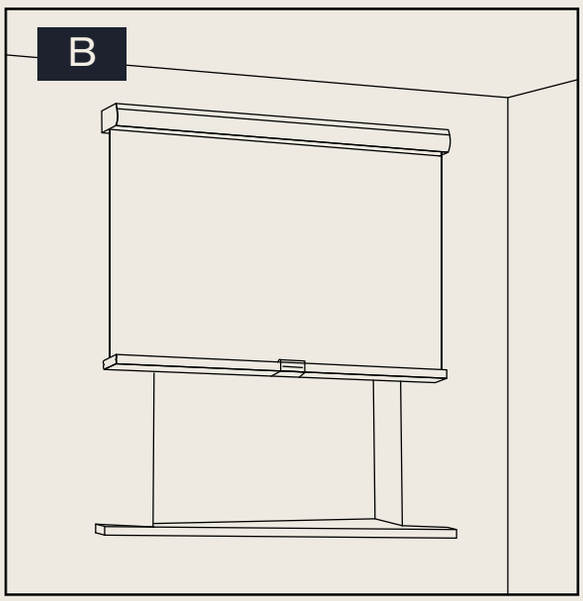

02. INSTALL THE FASTENERS

Install the fasteners at the top of the frame on the ceiling (A)
On the wall at the front of the frame (B)

A

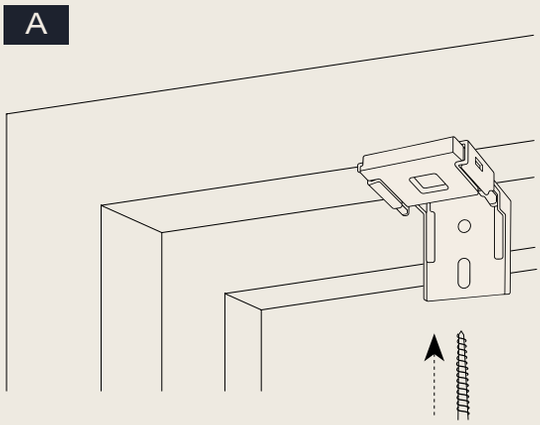

B

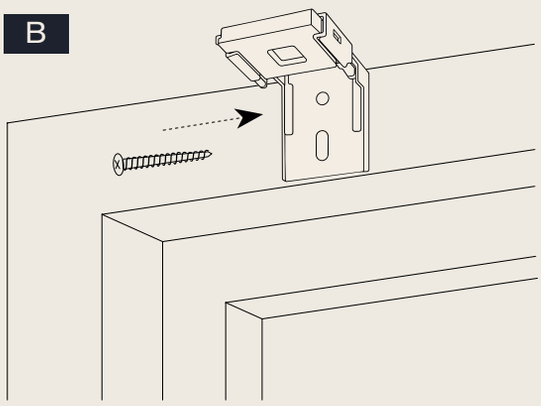

03. INSTALL THE BLIND ON THE SUPPORTS

1. Hold the blind tilted forward.
2. Press the blind against the bracket tab.
3. Lift the back of the blind.
4. Make sure the back of the blind clicks into the bracket hook.

